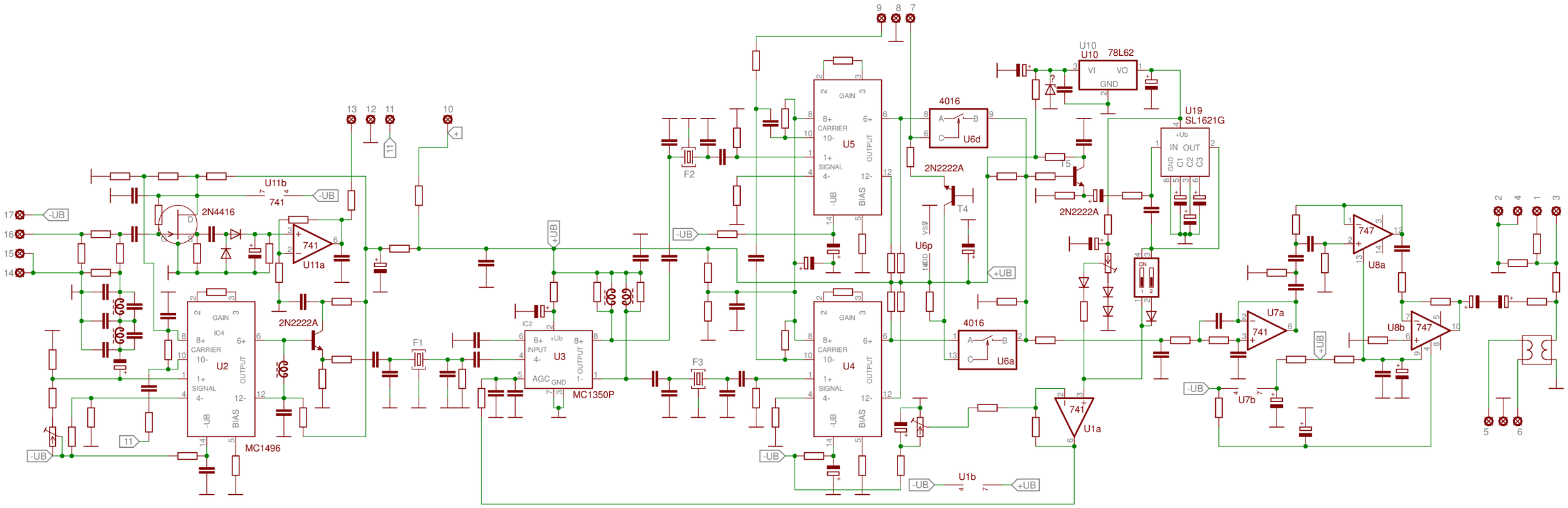

U11b
741
2N4416
U11a
741
2N2222A
U2
MC1496
IC4
GAIN
CARRIER
SIGNAL
OUTPUT
BIAS
-UB
F1
IC2
U3
MC1350P
INPUT
AGC
GND
+UB
F2
F3
U5
U4
U6d
U6a
U6p
4016
2N2222A
T4
U1a
U1b
U10
78L62
VI
VO
GND
U19
SL1621G
IN
OUT
U7a
U7b
U8a
U8b
747