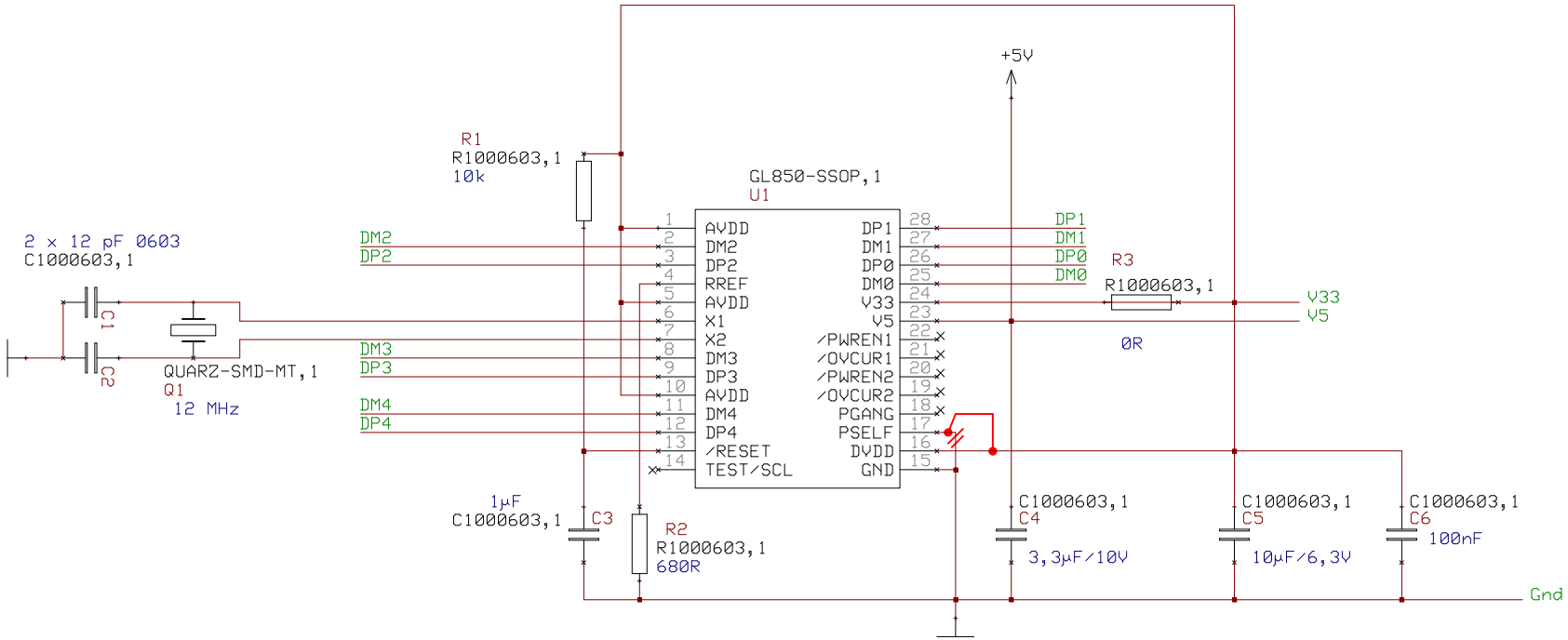
R1
R1000603,1
10k
GL850-SSOP,1
U1
+5V
2 x 12 pF 0603
C1000603,1
C1
C2
QUARZ-SMD-MT,1
Q1
12 MHz
DM2
DP2
DM3
DP3
DM4
DP4
AVDD
DM2
DP2
RREF
AVDD
X1
X2
DM3
DP3
AVDD
DM4
DP4
/RESET
TEST/SCL
DP1
DM1
DP0
DM0
V33
V5
/PWREN1
/OVCUR1
/PWREN2
/OVCUR2
PGANG
PSELF
DVDD
GND
R3
R1000603,1
0R
V33
V5
1µF
C1000603,1
C3
R2
R1000603,1
680R
C1000603,1
C4
3,3µF/10V
C1000603,1
C5
10µF/6,3V
C1000603,1
C6
100nF
Gnd