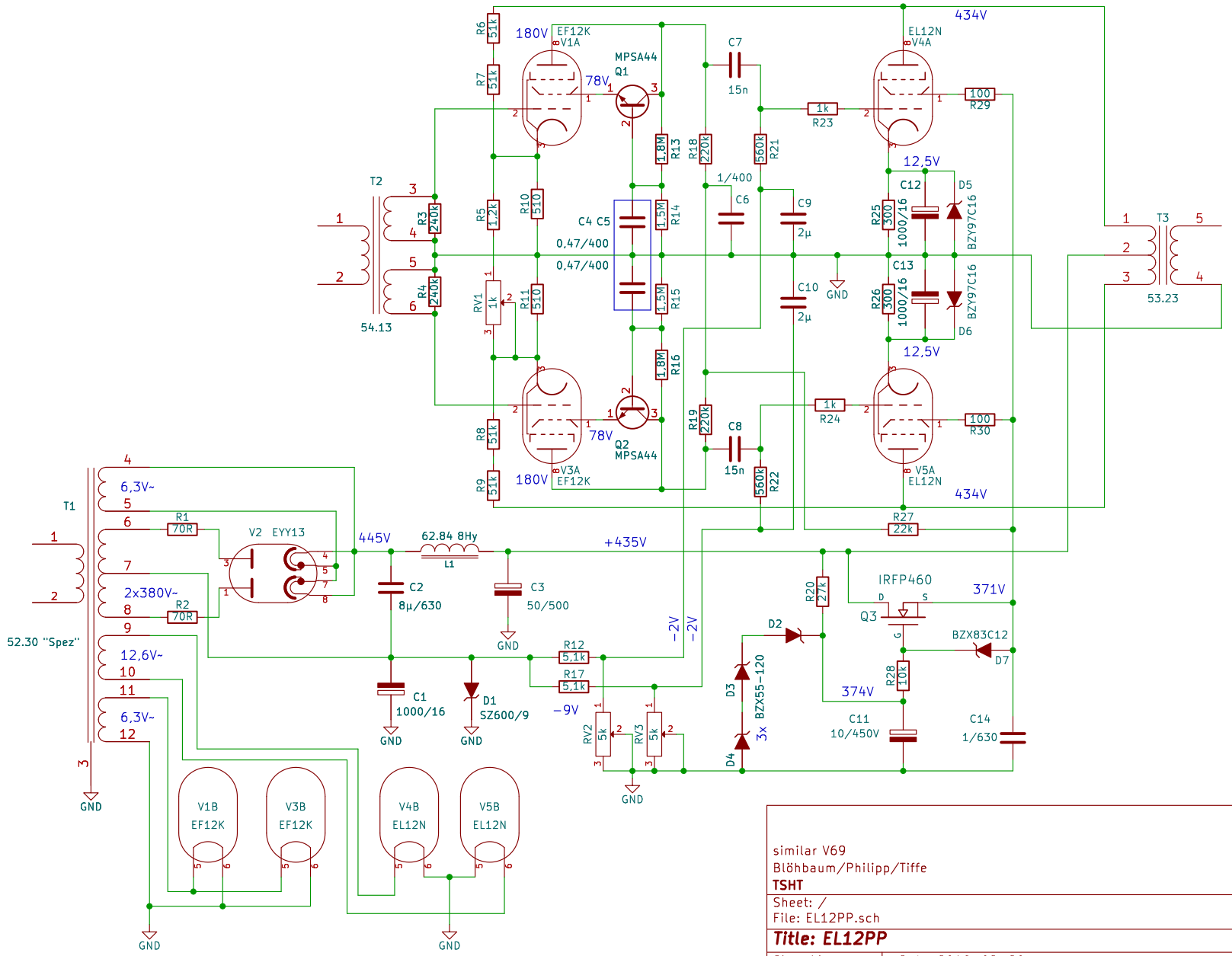

similar V69
Blöhbaum/Philipp/Tiffe
TSHT

Sheet: /
File: EL12PP.sch

Title: EL12PP

Size: A4	Date: 2016-02-20	**Rev: 1.3**
KiCad E.D.A. kicad (11-eol-48926-g5e661bb545c8)		Id: 1/1