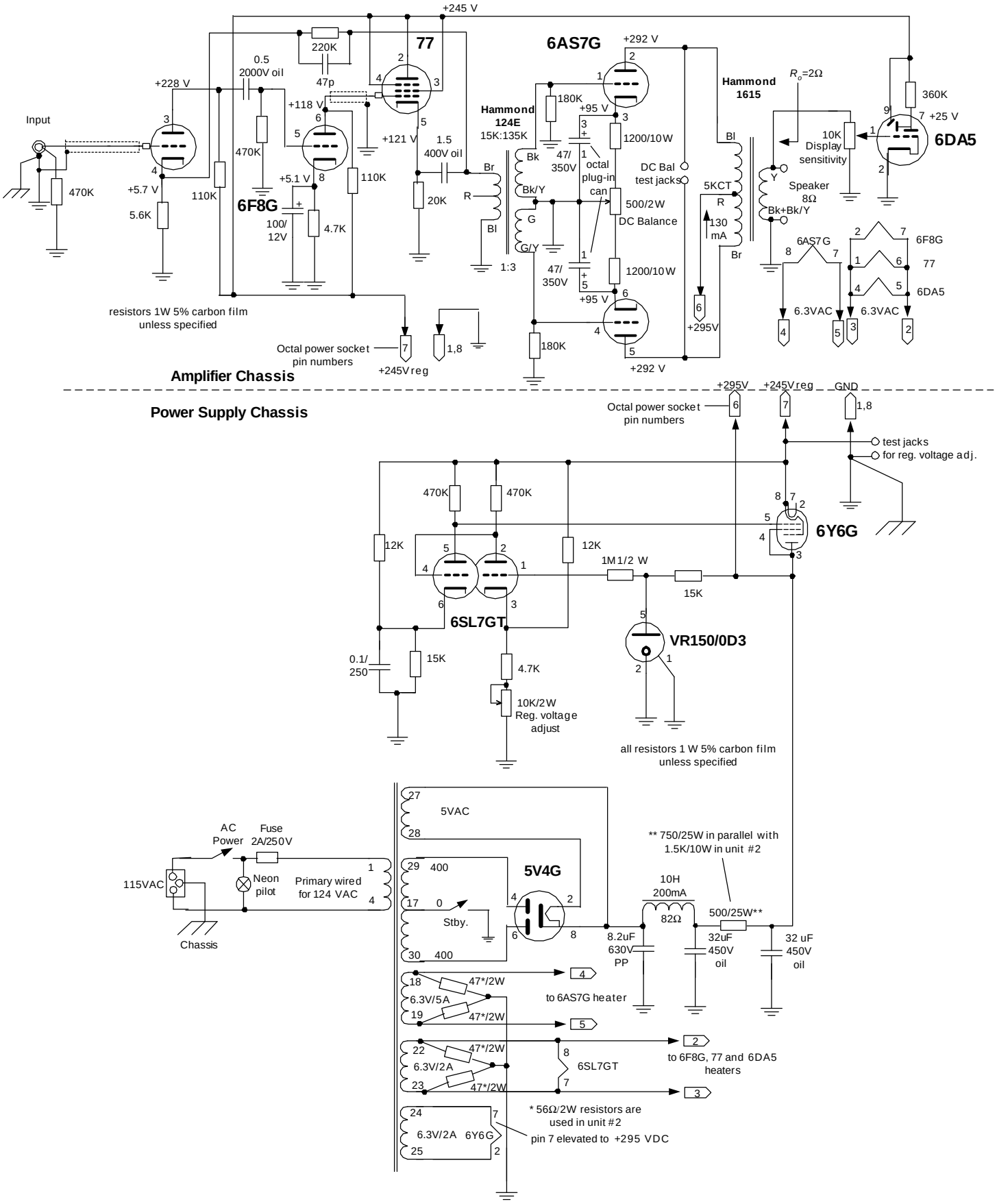Mapletree Audio Design
6AS7G Triode Push-Pull Power Amplifier (Monobloc)